ijergs
Open Access
International Journal of Engineering Research and Generic Science (IJERGS)
Available Online at www.ijergs.in
ISSN: 2455 - 1597
Volume -3, Issue - 4, July - August 2017, Page No. 12 - 19

Development of Cascade Full- Bridge Dual Buck Inverter with Phase-Shift Control Various PWM Techniques

Hafsa Fathima[1], Dr.Jaghannath.K[2], D.Kumara Swamy[3]

[1]M. Tech scholar, Dept of EEE, SVS Institute of Technology, Hanamkonda, T.S, India

[2]Assistant Professor, Dept of EEE, SVS Institute of Technology, Hanamkonda, T.S, India

[3]Associate Professor, HOD, Dept of EEE, SVS Institute of Technology, Hanamkonda, T.S, India

Abstract

Cascade H-bridge inverter has been widely used in various applications, especially where separate DC sources naturally exist in the places, such as Photovoltaics, fuel cells, battery energy storage, and electric vehicle drives. The advantages of cascade type inverters include the capability of reaching higher output voltage level by using standard lower voltage devices, and the modular design concept which makes the maintenance less burdensome.. The proposed cascade dual buck inverter with phase-shift control inherits all the merits of dual buck type inverters and overcomes some of their drawbacks. Compare to traditional cascade inverters, it has much enhanced system reliability thanks to no shoot-through problems and lower switching loss with the help of using power MOSFETs. With phase-shift control, it theoretically eliminates the inherent current zero-crossing distortion of the single-unit dual buck type inverter. In addition, phase-shift control and cascade topology can greatly reduce the ripple current or cut down the size of passive components by increasing the equivalent switching frequency. A cascade dual buck inverter has been designed and tested to demonstrate the feasibility and advantages of the system by comparing single-unit dual buck inverter, 2-unit and 3-unit cascade dual buck inverters at the same 1 kW, 120 V ac output conditions. Hybrid PWM technique leads to better performance of the cascade dual-buck full-bridge inverter as compared to cascade H bridge, it provides less output current ripple and harmonics, no zero-crossing distortion, and higher efficiency

Keywords: MOSFET, Frequency, Meter, Voltage, Power, CASCADE.

1. Introduction

Numerous industrial applications have begun to require higher power apparatus in recent years. Some medium voltage motor drives and utility applications require medium voltage and megawatt power level. For a medium voltage grid, it is troublesome to connect only one power semiconductor switch directly. As a result, a multilevel power converter structure has been introduced as an alternative in high power and medium voltage situations. A multilevel converter not only achieves high power ratings, but also enables the use of renewable energy sources. Renewable energy sources such as photovoltaic, wind, and fuel cells can be easily interfaced to a multilevel converter system for a high power application.

The concept of multilevel converters has been introduced since 1975. The term multilevel began with the three-level converter. Subsequently, several multilevel converter topologies have been developed. However, the elementary concept of a multilevel converter to achieve higher power is to use a series of power semiconductor switches with several lower voltage dc sources to perform the power conversion by synthesizing a staircase voltage waveform. Capacitors, batteries, and renewable energy voltage sources can be used as the multiple dc voltage sources. The commutation of the power

Corresponding Author: Hafsa Fathima, Page No. 12 - 19

switches aggregate these multiple dc sources in order to achieve high voltage at the output; however, the rated voltage of the power semiconductor switches depends only upon the rating of the dc voltage sources to which they are connected.

Advantages and Disadvantages

A multilevel converter has several advantages over a conventional two-level converter that uses high switching frequency pulse width modulation (PWM). The attractive features of a multilevel converter can be briefly summarized as follows.

- **Staircase waveform quality:** Multilevel converters not only can generate the output voltages with very low distortion, but also can reduce the dv/dt stresses; therefore electromagnetic compatibility (EMC) problems can be reduced.
- **Common-mode (CM) voltage:** Multilevel converters produce smaller CM voltage; therefore, the stress in the bearings of a motor connected to a multilevel motor drive can be reduced. Furthermore, CM voltage can be eliminated by using advanced modulation strategies
- **Input current:** Multilevel converters can draw input current with low distortion.
- **Switching frequency:** Multilevel converters can operate at both fundamental switching frequency and high switching frequency PWM. It should be noted that lower switching frequency usually means lower switching loss and higher efficiency.

Unfortunately, multilevel converters do have some disadvantages. One particular disadvantage is the greater number of power semiconductor switches needed. Although lower voltage rated switches can be utilized in a multilevel converter, each switch requires a related gate drive circuit. This may cause the overall system to be more expensive and complex.

Plentiful multilevel converter topologies have been proposed during the last two decades Contemporary research has engaged novel converter topologies and unique modulation schemes. Moreover, three different major multilevel converter structures have been reported in the literature: cascaded H-bridges converter with separate dc sources, diode clamped (neutral- clamped), and flying capacitors (capacitor clamped). Moreover, abundant modulation techniques and control paradigms have been developed for multilevel converters such as sinusoidal pulse width modulation (SPWM), selective harmonic elimination (SHE-PWM), space vector modulation (SVM), and others. In addition, many multilevel converter applications focus on industrial medium-voltage motor drives, utility interface for renewable energy systems, flexible AC transmission system (FACTS), and traction drive systems.

2. Topology and Operation Principle

The single-unit dual buck inverter has two basic forms, dual buck half-bridge inverter [22], [24] and dual buck full-bridge inverter [23]. The proposed cascade dual buck inverter has

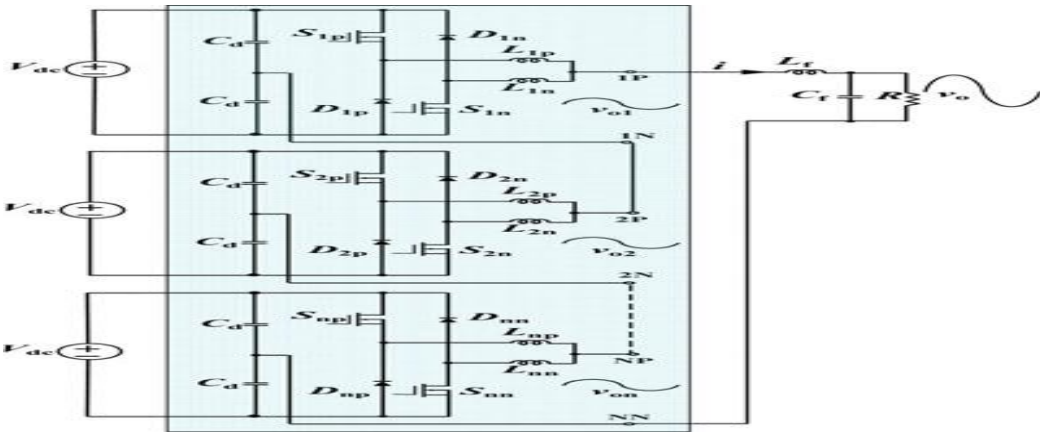

Figure 1: Topology of cascade dual buck half-bridge inverter.

Two types accordingly: cascade dual buck half-bridge inverter, shown in Fig. 1, and cascade dual buck full-bridge inverter, shown in Fig. 3. This paper will focus on the analysis, design, and testing of the cascade dual buck half-bridge inverter to demonstrate the feasibility and advantages of cascade dual buck inverters. In [24], the control strategy for two dual buck half-bridge inverters in series output to obtain higher voltage was proposed. However, the two dual buck inverters shared the same dc power supply, had two sets of filter inductor and capacitor, and the connection was only effective for two units. The proposed inverter in this paper features a different series connection concept, the cascading, which has separate dc power supplies for each cell, and is extended to *N* unit connection, and shares the same filter components. Fig. 1 shows the topology of the proposed cascade dual buck half-bridge inverter. It consists of *N* units of single dual buck half-bridge inverter. Each unit is composed of two power MOSFETs and two fast recovery diodes. Each unit has two output ports, *i*P and *i*N (i = 1, 2. . . *N*). To realize the cascade topology, the *i*N port of the *i*th unit is connected with the (*i* +1)P port of the (*i* + 1)th unit, and port 1P and NN are used as the output ports. Sip and *D*ip are a working pair, and operate at the positive half-cycle of output current *i*. *S*in and *D*in are another working pair, and operate at the negative half-cycle of output current i. The single unit operation modes are shown in Fig. 2 [22],

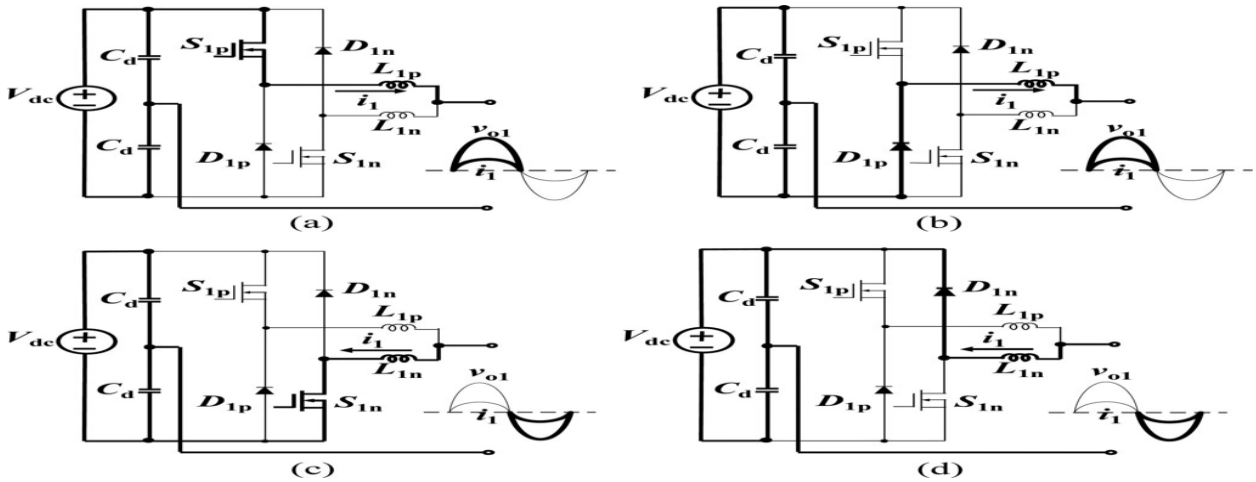

Figure 2 : Operation modes of single-unit dual buck half-bridge inverter.(a) Positive current, *S*1p turned ON. (b) Positive current, *D*1p free-wheeling.(c) Negative current, *S*1n turned ON. (d) Negative current, *D*1n free-wheeling

3. Phase-Shift Control Analysis

One of the significant characteristics of a single-unit dual buck type inverter is that the switch is selectively working based on the direction of output current. From the operation modes of single-unit half-bridge dual buck inverter in Fig. 2, we can clearly see that when $i1$ is positive, $S1$p and$D1$p are the working pair, and when $i1$ is negative, $S1$n and $D1$n are the working pair. However, this distinctive operation leads to its inherent drawback, current zero-crossing distortion, which will be explained in detail below. This issue can be passively mitigated by turning on both $S1$p and $S1$n near zero-crossing period.

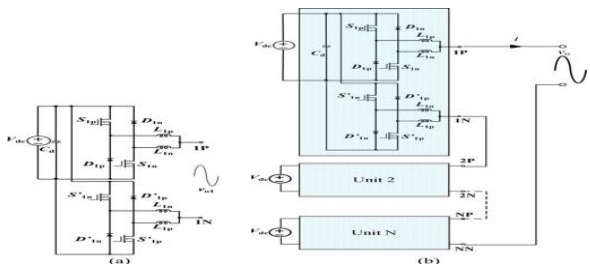

Figure 3: Single-unit dual buck full-bridge inverter serving as one cell for cascade dual buck full-bridge inverter. (a) Single-unit dual buck full-bridge inverter.(b) Cascade dual buck full-bridge inverter.

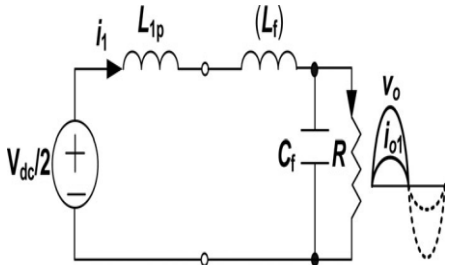

Figure 4: Equivalent circuit of single-unit half-bridge dual buck inverter when *S*1p is ON.

However, this remedy is against the operating principle and the best feature of the dual buck type inverter, which is high reliability by avoiding turning on both active switches at the same time. In addition, this passive measure results in higher switching losses because at zero-crossing period two switches are switching while the original goal of dual buck inverter is to have only one switch operating at any given time.

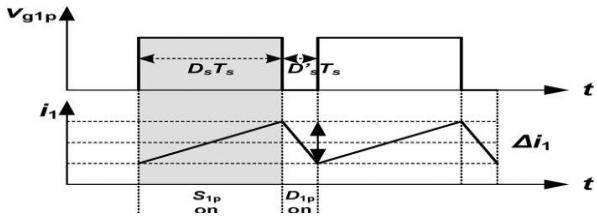

Figure 5: Gate signal of *S*1p and current *i*1 through output inductor of single-unit Half-bridge dual buck inverter.

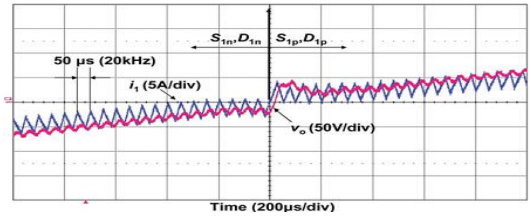

Figure 6: Experimental result of single-unit half-bridge dual buck inverter at zero crossing period.

4. Simulation Diagram And Result

The analysis, design and implementation of the cascade dual-buck inverters has been carried out and presented in this chapter. Compared to traditional cascade inverters, cascade dual-buck inverters have enhanced system reliability, no dead time and shoot-through concerns and they can achieve lower switching losses with the help of using power MOSFETs.

Simulation result of dual-buck full-bridge inverter under AHCU PWM

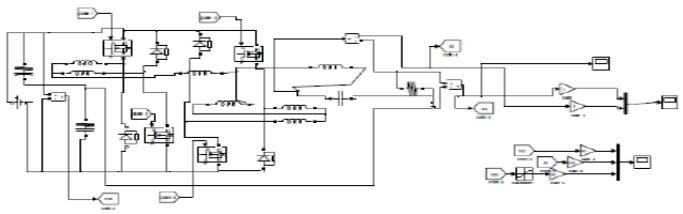

Figure 7: Simulation diagram of Single dual-buck inverter

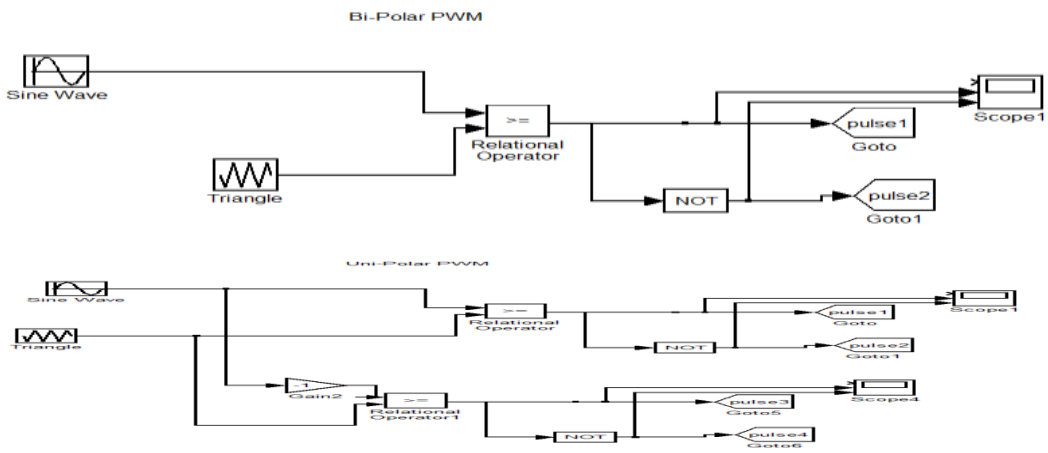

Figure 8: Simulation diagram of Bipolar PWM and Uni-Polar PWM

The output of sliding mode controller is the actual speed which is estimated from motor current and voltage as its input. The controller is designed with the help of above equations which is described in section VI.

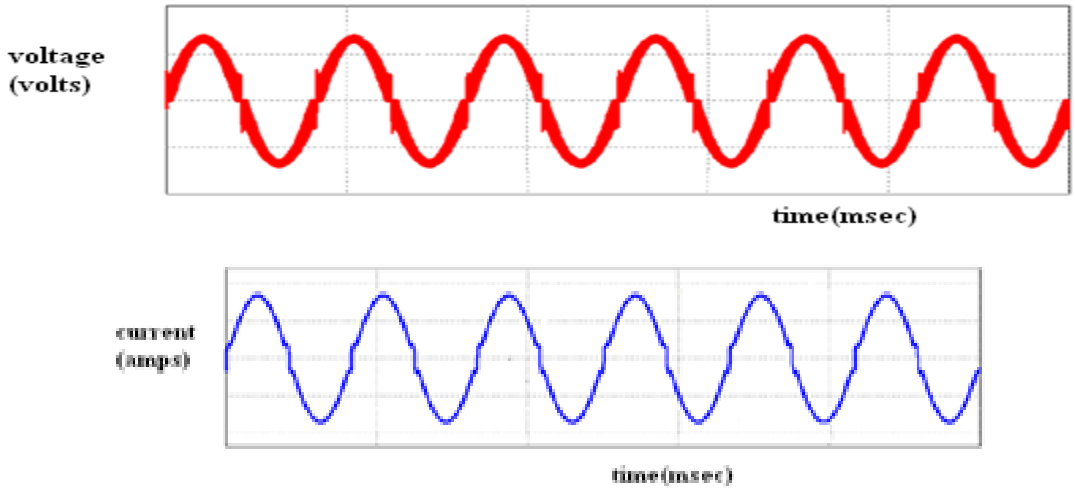

Figure 9 : Waveform of Output Voltage and current

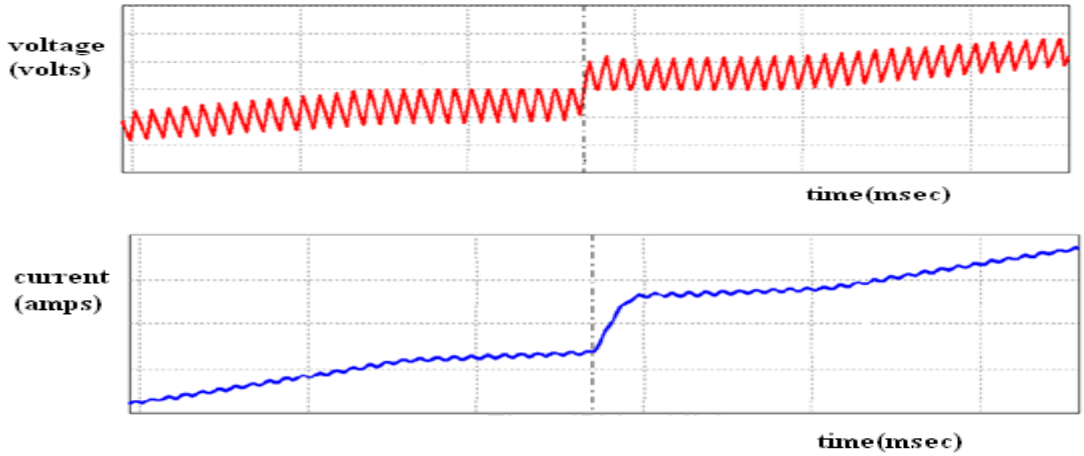

Figure 10: Waveforms of voltage and current at zero crossing

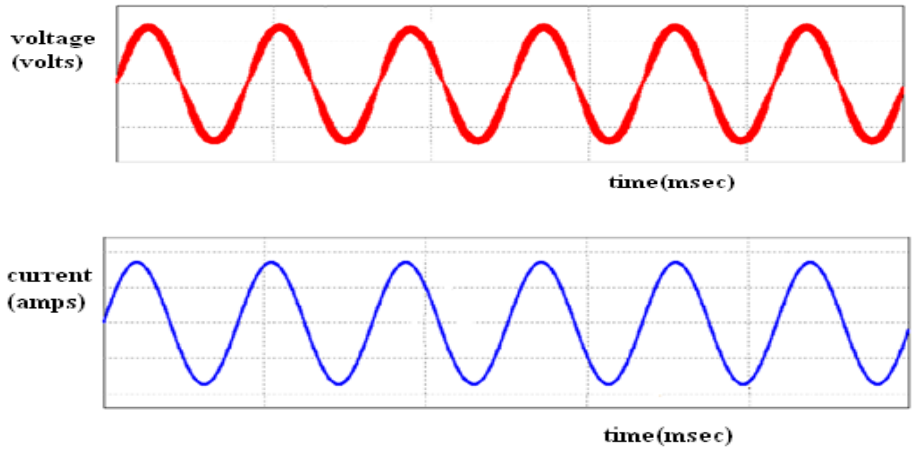

(a) Waveforms of voltage and current

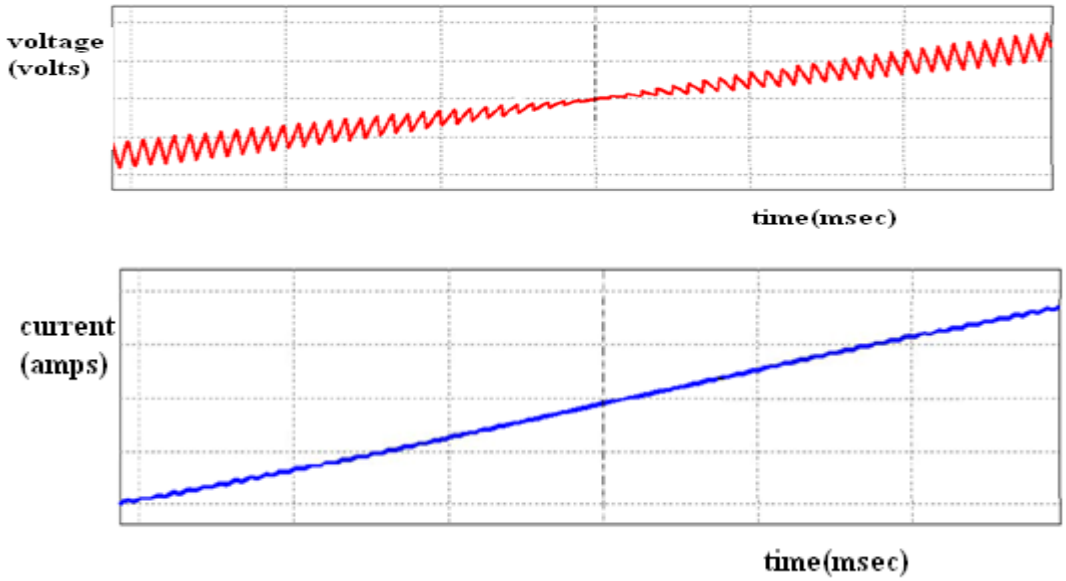

Figure 11: Waveforms of voltage and current at zero crossing

5. References

[1]. Arash A. Boora, Alireza Nami, Firuz Zare, Arindam Ghosh, and Frede Blaabjerg,(Oct 2010) "Voltage-Sharing Converter to Supply Single Phase Asymmetrical Four-Level Diode Clamped Inverter With High Power Factor Loads", IEEE Trans On Power Electronics, Vol. 25, No. 10, Pp. 2507-2520.

[2]. Baoming Ge, Fang Zheng Peng, Aníbal T. de Almeida, and Haitham Abu-Rub, (Aug 2010) "An Effective Control Technique for MediumVoltage High-Power Induction Motor Fed by Cascaded Neutral-Point-Clamped Inverter", IEEE Trans On Industrial Electronics, Vol. 57, No. 8, pp. 2659-2668.

[3]. C. Attaianese, M. Di Monaco, and G. Tomasso, (2010) "Three-Phase Three-Level Active NPC Converters for High Power System", International Symposium on Power Electronics, Electrical Drives, Automation and Motion, pp. 204-209, Speedam.

[4]. Grain P. Adam, Stephen J. Finney, Ahmed M. Massoud, and Barry W. Williams, (Aug 2008) "Capacitor Balance Issues of the Diode-Clamped Multilevel Inverter Operated in a Quasi TwoState Mode" IEEE Trans On Industrial Electronics, Vol. 55, NO. 8, pp. 3088- 3099 .

[5]. H. K. Al-Hadidi, A. M. Gole, and David A. Jacobson, (April 2008) "A Novel ConFigureuration for a Cascade Inverter-Based Dynamic Voltage Restorer With Reduced Energy Storage Requirements", IEEE Trans. On Power Delivery, Vol. 23, No. 2, pp. 881-888.

[6]. J. Liu, and Y. Yan, (2003) "A Novel Hysteresis Current Controlled Dual Buck Half Bridge Inverter", in *Proc. IEEE PESC*, 2003, pp. 1615-1620.

[7]. Jeffrey Ewanchuk, John Salmon, and Behzad Vafakhah, (Sept/Oct 2011) "A Five-/Nine-Level TwelveSwitchNeutral-Point-Clamped Inverter for High-Speed Electric Drives", IEEE Trans on Industry Applications, Vol. 47, No. 5, pp. 2145-2153.

[8]. Jin Li, Jinjun Liu, Dushan Boroyevich, Paolo Mattavelli, and Yaosuo Xue, (Dec 2011) "Three-level Active Neutral-Point-Clamped Zero-CurrentTransition Converter for Sustainable Energy Systems", IEEE Trans. On Power Electronics, Vol. 26, No. 12, pp. 3680-3693.

[9]. Jin Li, Jinjun Liu, Dushan Boroyevich, Paolo Mattavelli, and Yaosuo Xue, (May 30-June 3, 2011) "Comparative Analysis of Three-Level Diode Neural-PointClamped and Active Neural-Point-Clamped Zero-Current-Transition Inverters", 8th International Conference on Power Electronics, pp. 2290-2295.

[10]. Jun Li, Subhashish Bhattacharya, and Alex Q. Huang, (March 2011) "A New Nine-Level Active NPC (ANPC) Converter for Grid Connection of Large Wind Turbines for Distributed Generation", IEEE Trans On Power Electronics, Vol. 26, No. 3, pp. 961-972.

[11]. Marcelo C. Cavalcanti, Alexandre M. Farias, Kleber C. Oliveira, Francisco A. S. Neves, and João L. Afonso, (Jan 2012) "Eliminating Leakage Currents in Neutral Point Clamped Inverters for PhotovoltaicSystems", IEEE Trans. On Industrial Electronics, Vol. 59, No. 1, pp. 435- 443.

[12]. Pablo Lezana, José Rodríguez, and Diego A. Oyarzún, (March 2008)"Cascaded Multilevel Inverter With Regeneration Capability and Reduced Number of Switches", IEEE Trans. On Industrial Electronics, Vol. 55, No. 3, pp. 1059-1066.

[13]. Robert Stala, (Sept 2011) "Application of Balancing Circuit for DC-Link Voltages Balance in a Single-Phase Diode-Clamped Inverter With Two Three-Level Legs", IEEE Trans On Industrial Electronics, Vol. 58, No. 9, pp. 4185-4195.

[14]. Z. Yao, L. Xiao, and Y. Yan, (Aug 2009)"Dual-Buck Full-Bridge Inverter With Hysteresis Current Control", IEEE Trans. Ind. Electron., vol. 56, no. 8, pp. 3153–3160.

[15]. Zhiguo Pan, Fang Zheng Peng, Keith A.Corzine, Victor R. Stefanovic, John M. (Mickey) Leuthen, and Slobodan Gataric, (Nov/Dec 2005) "Voltage Balancing Control of DiodeClamped Multilevel Rectifier/Inverter Systems" IEEE Trans On Industry Applications, Vol. 41, No. 6, pp. 1698-1706